Mechatronics 20 (2010) 842–849

Contents lists available at ScienceDirect

Mechatronics

journal homepage: www.elsevier.com/locate/mechatronics

Model relations between conceptual and detail design

R. Scheidl [a,*], B. Winkler [b]

[a] Institute of Machine Design and Hydraulic Drives, Johannes Kepler University Linz, Altenbergestraße 69, 4040 Linz, Austria
[b] Linz Center of Mechatronics, GmbH, Altenbergestraße 69, 4040 Linz, Austria

ARTICLE INFO

Keywords:
Model based conceptual design
Design map
Model relations

ABSTRACT

Conceptual design, as an essential step towards successful mechatronic product development, should be supported by good models for the design map, which in turn expresses the relationship between the design parameters and the functional requirements. If feasible, these models should be mathematical. In this paper the close correlation between a good concept and its models is postulated. A theory is presented how these models are related to models employed for detail design and how good concept models can be characterised. The practical realisation of this characterisation relies on the decomposability of the whole design map in several low dimensional decoupled parts. This corresponds to Suh's independence axiom. Modelling aspects of the development of an energy saving hydraulic variable valve train for combustion engines are used as a demonstrative example.

© 2010 Elsevier Ltd. All rights reserved.

1. Introduction

The decisive role of conceptual design in successful product development has sufficiently been highlighted in the design literature. This is even more relevant for mechatronic systems, since the mechatronics architecture is largely defined in conceptual design. Consequently, numerous methods were proposed to support the conceptual design work. Among these different methods, modelling and simulation and concept evaluation techniques play a major role. For mechatronic systems, modelling and simulation in conceptual design have been emphasized stronger than, for instance, in mechanical engineering, particularly in the late 1980s and 1990s when academic mechatronics research became popular in Europe (see, e.g., [1–4]). The terms 'modelling' and 'simulation' in the context of mechatronic system design are generally understood as modelling of dynamical systems and their numerical simulation. This reflects the strong role of dynamical aspects and of control in such systems. Quite often, such models are not related to a specific design phase (conceptual or detail) but are considered as models par excellence for that system. If it comes to the development of particular components or sub-systems, modelling of other aspects, like strength or stiffness by, e.g., Finite Elements, is frequently reported in the scientific mechatronics literature, though (see, e.g., [5,6]).

Particularly in industrial practice, the organisation of the total design process is oriented to final product definition and not to maintenance of the design concept. This is the reason why no general standards exist to describe concepts effectively. An attempt to develop a general notation of sketching in mechanical design [7] did not find a broad acceptance. Conceptual design and related modelling strategies are crucial in product development. Not only they generate important information for detail design but are also strong fundamentals for the whole life cycle of a product including all its design revisions.

There are at least two types of feed-back loops that are usually acknowledged in design literature and that play an important role in practice: (i) the iterative design cycles that are often necessary since design is seldom a straight-forward process and (ii) the great role of design experience (see, e.g., [8,9]) that includes also detail design experience. Both of these feed-back loops transfer information from detail design to concept design. But hardly any rule or theory can be found on model relations between conceptual and detail design. This probably stems from the different types and functions of models and the respective tools in these different design phases.

There is no design activity without models, if the model definition of Thompson [10] is adopted which states (citation)

> "*All humans model. We build these models within ourselves as a template for what to anticipate under the varied condition of our daily experience.*"

In the following, a more specific definition of models will be applied, namely formal models, in particular mathematical ones. The use of these in conceptual design has a long tradition dating back to the origins of scientific engineering (see for instance, the 19th century statement of F. Redtenbacher[1] about the benefit of

* Corresponding author. Tel.: +43 732 2468 9745; fax: +43 732 2468 9753.
E-mail address: rudolf.scheidl@jku.at (R. Scheidl).

[1] Ferdinand Redtenbacher (1809–1863), Prof. of Machine Design at Karlsruhe Technical University is reckoned as a founder of mechanical engineering science.

0957-4158/$ - see front matter © 2010 Elsevier Ltd. All rights reserved.
doi:10.1016/j.mechatronics.2010.04.008

mathematical modelling in [11]). Traditionally, mathematical models account for the physical limitations of the design with an appropriate level of accuracy [10]. Several proposals exist to also exploit some qualitative properties of these models for concept evaluation. A prominent method is Suh's Axiomatic Design [12,13] which stresses the simplicity of the relation between the design parameters (DPs) and the functional requirements (FRs) for a successful product design in its 1st design axiom. This relation is called design map (DM) in the following. In his publications Suh does not explicitly declare that his 1st design axiom is to be applied in conceptual design. But the axiom's characteristics and the corresponding examples in Suh's publications suggest this. Other methods are related to a qualitative assessment of the mathematical models structure, such as that by Steiner and Scheidl [14] which uses Friedmann's constraint theory [15] to analyze the complexity of the DM. But the relationship between models of conceptual and detail design is not addressed in either of these papers.

In Dierneder and Scheidl [16] the model relations between different design phases are addressed. It states that a good concept has the property that the DM at the detail design level (DM_{detail}) is only a regular perturbation of the DM at the concept level ($DM_{concept}$). Without explaining perturbation theory (see, for instance [17]) in detail this means that DM_{detail} becomes exactly $DM_{concept}$ if those parameters which account for the modelling differences tend to zero. This conjecture is not further elaborated in Dierneder and Scheidl [16] since it focuses more on the functional decomposition method. Furthermore, the use of perturbation theory in the practical application of this conjecture is mostly impractical for people inexperienced in its use. Perturbation theory needs a dimensionless formulation of the mathematical relations, the identification of one or another small parameter, and a sound understanding of qualitative mathematical properties of the relations under study, e.g. the qualitative theory of differential equations.

It should be mentioned that good modelling, particularly for conceptual design, is a formidable task. It requires familiarity with the relevant physics, the structure of the model and how it operates in that design problem. There is a latent danger of model deficiencies, particularly if familiar models are used for cases which are outside their validity range. If such model misuse is lately discovered in the development process, this may cause large extra costs. All this favours a culture of a steady improvement and maintenance of concept models.

The idea to exploit model relations of conceptual and detail design as a means to assess the validity of a concept and to improve concept models will be discussed in this paper. Together with this the authors would also like to promote a symbiotic concurrence of hands-on activities, experience, and creativity on the one hand and formal, model based, systematic approaches on the other hand. This concurrence is needed for successful and innovative solution of today's often complex design problems.

In the following section the characteristics of a good concept are discussed and how this is related to detail design. In Section 3 the nature of model relations will be worked out and in Section 4 the exploitation of this theory is demonstrated showing the development of a hydraulic variable valve train for gas engines.

2. Characteristics of a good concept

It is common understanding that product development happens in cycles. Ideas have to be brought up, evaluated, and modified or replaced – if necessary. Many designers start with some abstract idea of the solution – called concept. At first they work with functions and specify technical realisations of the functions rather lately. This approach is called function analysis [9,18]. The overall function is composed by several sub-functions called functional elements (FE) [19], which, if so, can be further decomposed until one ends up with no more decomposable functions, called essential sub-functions by Cross [8] or elementary functions by Roozenburg and Eekels [9]. The concept is further characterised by the interaction structure of these FE, called the architecture of the concept or its function structure [18]. Functions typically operate in the physical space if we limit our considerations to mechanical or electrical systems and disregard information functions. Typical elementary functions are, e.g., drive a rotary load, amplify an electrical current, or guide a mechanical system along a straight line. Physical laws and DPs can be associated with such functions, e.g. the moment of momentum equation and the rotary inertia. Mathematical models of these concepts can be derived from physical laws. With these models and estimates of some of the DPs the fulfilment of the FRs and of boundary conditions (BCs) (e.g., that the system has sufficient mechanical strength) can be assessed quantitatively. In best case, the inverse of the DM ($DM^{(-1)}$) can be derived explicitly. This enables a very efficient concept evaluation because the DPs for given FRs can be determined directly without any iteration. Furthermore, the system robustness (how do FRs change with variations in the DPs) can be assessed easily. Of course, existence of $DM^{(-1)}$, requires equal numbers of DPs and FRs (if applicable, plus BCs). It is obvious that the quality of the design assessment depends on the significance of the models and of the DP estimates. The latter is very critical if the estimated material parameters or manufacturing methods are close to technological limits. Then no reserve exists to compensate the mostly downgrading influence on system performance by effects not covered by the simple concept model.

Since the final technical realisation is not fully known, the concept models are always idealised and cannot account for effects that are created by details of the technical realisation. Nonetheless, some of these effects can be anticipated from experience and can be approximated in the concept model.

No clear borderline between conceptual and detail design exists [8]. There is just a gradual change from the abstract to the concrete which happens in several levels depending on the complexity of the system under development. A rotary drive, for example, can be one out of several types of electrical or hydraulic motors, all having different characteristics concerning their own rotary inertia, thermal behaviour, controllability, etc. It is not clear if the specification of the motor type is part of concept definition or not. Obviously, leaving it open enlarges the solution space, specifying it enables a more reliable assessment of the concept. But what else is a good concept, if it cannot even be defined sharply? It has to fulfil the following demands:

1. A good concept should enable a fast and cheap further development of the product which meets the FRs and fulfils the BCs. This is achieved if the number of design cycles can be kept low and the detail design does not decisively debase what the concept models promise with respect to the fulfilment of the FRs and BCs.
2. It should facilitate a cheap and reliable production and exhibit sufficient potential for easy and reliable product modifications in the future. Such modifications may become necessary to account for changed performance characteristics, to exploit new or improved technologies (e.g., a new positioning drive technology offering higher precision), or to add new product features requested by the market.

What is stated in both demands can be condensed to one 'concept robustness requirement':

Robustness of the concept with respect to detail design for a fairly wide performance range.

Concept model development which finally leads to the DM is influenced by both demand categories listed above. The concept robustness requirement also has to hold for the concept models since they are part of the concept. But how can this robustness be checked in view of the different nature of models in concept and detail design? This is analysed in the next section.

3. Model relations

Models in concept phase and detail design phase have quite different properties. In concept phase they provide the whole view, concentrate on the main effects, are coarse, and manage with a smaller number of DPs, whereas in detail design they are more focussed on specific effects, are more accurate, and need much more parameters.

When the detail design is done the predictions of the concept model(s) can be controlled by more refined models, e.g. in case of a hydraulic variable valve train, by a numerical model in Matlab/Simulink or by experiments with a prototypal realisation of the valve train. The concept of the valve train is sustainable if no major modifications of the main DPs are necessary to achieve the desired performance.

The detail design normally involves a lot more DPs than the concept design. The meaning of these parameters may differ from those of the concept models, but always a mapping Φ (see Fig. 1) can be constructed from the space of the DPs of the detailed model, called DP_{detail}, to the DPs of the concept model, $DP_{concept}$, provided the concept can still be 'found' in the detail design. That mapping Φ is, so to say, the 'identifier' of the concept in the detail design in the modelling context. Mathematically it is a projection from the usually higher dimensional space of the DP_{detail} into the lower dimensional space of the $DP_{concept}$.

This is made clear by models for the deflection of a beam which is a frequently used structural component. On concept level the Bernoulli–Euler beam theory [20] may used to model the beam deflection w_{Load} under a single load force of a cantilever beam (see Fig. 2a). The intrinsic stiffness parameter of Bernoulli–Euler beam theory is the bending stiffness EI. On the detail level that beam might be realised as a rectangular, thin walled beam which is parameterised by its height H, width B, and wall thickness b (see Fig. 2b). From this parameter space $HxBxb$ the mapping Φ to the one dimensional space of the axial moments of inertia I of the beam's cross section is provided by relation (1) (see, e.g. [21]).

$$I = \Phi(H,B,b) = \frac{1}{2}\left(BH^3 - (B-2b)(H-2b)^3\right) \tag{1}$$

A Finite Element analysis as a refined model of that beam can provide a more accurate deflection result, for instance, to account for shear deflection effects or for a local plate bending of the thin beam walls in the neighbourhood of a load force (see Fig. 2b). The beam model will be adequate if the bending deflection and its dependency on the main DPs are approximated with good accuracy, which means that the other effects, not included in the beam model, are relatively small disturbances which do not destroy the main picture of the DM: $HxBxb(xE) \rightarrow w_{Load}$.

$$DM : w_{Load} = \frac{Fl^3}{3E\Phi(H,B,b)} \tag{2}$$

For a rather short and thin walled beam the shear effect and the local bending deflection under the load might be significant, if not dominant. In that case Finite Element modelling may become necessary. To obtain a simple but valid concept model for such beam proportions, Timoshenko theory [21] instead of Bernoulli–Euler theory can be used, since it accounts for shear deflection. The local plate bending effects which Timoshenko theory cannot handle could be made insignificant by local stiffening. From this example one among other important tasks of detail design becomes evident: to save the validity of the concept, as quantified by its simple models, in the detail design phase by adding appropriate design attributes.

Normally the states of concept and detail models are different. Finite Element models of a solid body's elastic deformation may have thousands or millions of state variables. The relation of the beam end deflection according to Eq. (2), however, is a simple analytic expression for the scalar variable w_{Load}. The same holds true for models of magnets. Magnetic circuit theory typically yields compact relations for a few scalar quantities such as magnetic flux, voltage, or force, whereas Finite Element models have a huge number of states for magnetic field strength, induction, current density, or Maxwell stresses.

States are only intermediate values for deriving the DM which is the only relevant relation from the design viewpoint. Thus, it is dispensable to compare differences in the state variables of concept and detail design models. But the different numbers of DP_{detail} and $DP_{concept}$ prohibit a direct comparison. This can only be made in the lower dimensional $DM_{concept}$.

What kind of agreement of $DM_{concept}$ and DM_{detail} makes sense from a design viewpoint? As derived in Section 2 good concept models make predictions that can be fulfilled also by the detail design. Fig. 1 shows qualitatively, how the involved parameter spaces $DP_{concept}$ and DP_{detail} and the space of FRs are related to each other by maps and how these maps are represented by manifolds or graphs, respectively. On the left hand side of Fig. 1 parameter spaces and FRs space are shown separately to indicate that these spaces often have high dimension and that consequently the DMs cannot be fully represented by graphs. On the right hand side of Fig. 1 the DMs are sketched as manifolds in the product space $DP_{concept} \times FR$.

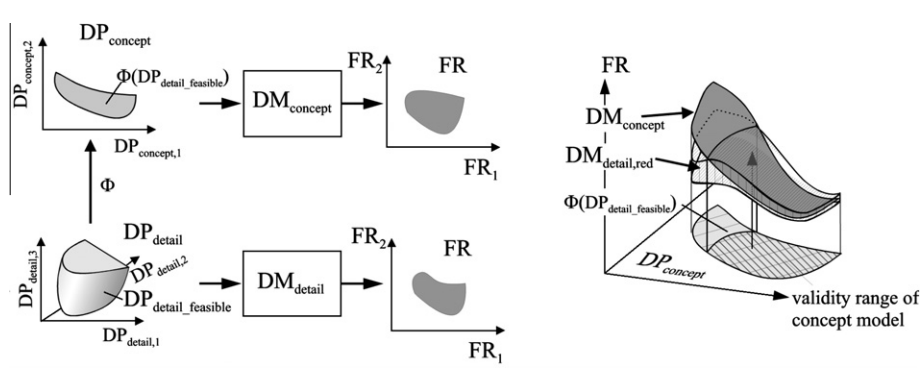

Fig. 1. DMs of concept ($DM_{concept}$) and detail design (DM_{detail}) and their comparison. $DM_{concept}$ maps from the space of the concept model parameters $DP_{concept}$ with its co-ordinates $DP_{concept,1}$, $DP_{concept,2}$, ... to the space of FR. DM_{detail} maps from the space of the detail model parameters DP_{detail} with its co-ordinates $DP_{detail,1}$, $DP_{detail,2}$, ... to FR.

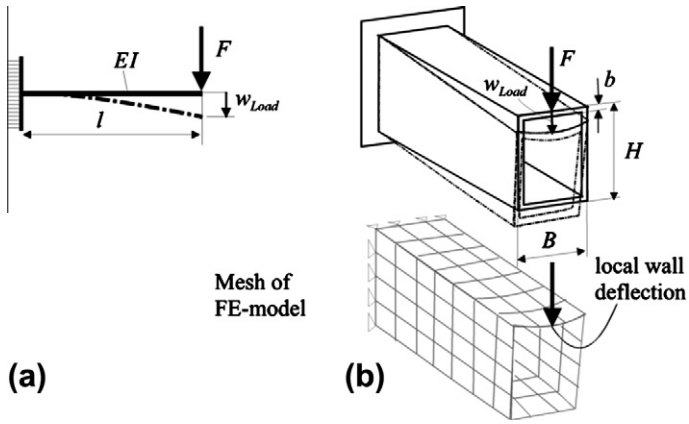

Fig. 2. Sketches of different beam models; (a) Euler–Bernoulli model of a cantilever beam requires only bending stiffness *EI*, length *l*, and load *F* as model parameters; (b) the realisation of a beam as a thin walled structure may cause local deflections which can, for instance, be evaluated by a Finite Element (FE) model employing shell elements.

$DM_{concept}$ is a unique function of $DP_{concept}$. $DM_{detail,red}$ is not a function of $DP_{concept}$ but is a projection of DM_{detail} into $DP_{concept} \times FR$. That projection consists of two parts: the domain set DP_{detail} of DM_{detail} or its subset $DP_{detail_feasible}$, respectively (its meaning is explained below), are projected to the domain set of $DP_{concept}$ by Φ; the elements $DM_{detail}(DP_{detail_feasible})$ of the codomain set FR are projected just by the identity map, since the codomain sets of DM_{detail} and $DM_{concept}$ in the context of this comparison are the same FRs.

$DM_{concept}$ makes useful predictions, if technically feasible combinations of DP_{detail}, named $DP_{detail_feasible}$, can be found which provide roughly the same FRs as $DM_{concept}$ does for the corresponding values of $DP_{concept} = \Phi(DP_{detail_feasible})$. Additionally, Φ should not be very sensitive to variations $\delta(DP_{detail})$ in the subspace $DP_{detail_feasible}$, otherwise, even a $DM_{concept}$ that is robust itself (meaning low sensitivity of the FR with respect to variations of $DP_{concept}$) would not be realised robustly on the detail design level. This is not a usual robustness criterion but refers to the robustness of the concept with respect to the detail design as stated at the end of Section 2.

Fig. 1 also indicates that $DM_{concept}$ may have a limited validity range. If FRs cannot be fulfilled by any technically feasible detail realisation of a concept this concept must be replaced by another one.

Clearly, in many practical design problems such maps are much more complex and graphical representations as in Fig. 1 are not always possible. However, if the DM fulfils Suh's independence axiom, graphical representations according to Fig. 1 are easily possible. But, comprehension of the DM is also possible with a less strict decoupling than Suh's axiom asks for. In this context a more general formulation of that axiom could read: *Concepts are to be preferred whose DM can be decomposed in a set of fairly simple uncoupled maps (say, each involving 3 DPs maximum).*

4. Example hydraulic variable valve train

The development of a hydraulic variable valve train (VVT) for combustion engines is taken as an example to elucidate the theoretical statements of the last section. An overview about variable valve timing can be found in [22]. A VVT based on an energy saving hydraulic spring concept has been developed by the authors' research group [23–25]. For the purpose mentioned above it suffices to take the first development period leading to a first simple prototype. The two main FRs on the VVT are:

FR_1: Realisation of a certain maximum stroke x_{max} of the engine valves' opening/closing motion.

FR_2: Realisation of a certain switching time t_{sw} in which that engine valve opens and closes.

5. Concept design model

The basic idea of this VVT concept which is shown in Fig. 3 by its hydraulic circuit is to use the fluid fill cavities V1 and V2 (of size V_1 and V_2, respectively) in combination with the fluid compressibility, quantified by its compression modulus E_{oil}, as a hydraulic spring. The system constitutes a mechanical oscillator with the mass m of the piston plus the attached engine valve and two springs realised by fluid compressibility in V1 and V2. The 2/2 way valve Va1 is a latch that holds the oscillator in its end positions. At closed engine valve position ($x = 0$) V1 and V2 have system pressure p_S. When Va1 is opened the net hydraulic force on the piston is positive since then the two cylinder pressures p_1, p_2 equal the system pressure p_S and the piston area A_1 is larger than the rod side area A_2. Hence, the piston is accelerated. When the piston moves in outward direction the pressure in V2 increases and decreases in V1. After some time the hydraulic force reverses and, finally, the piston speed $\dot{x}$ becomes zero; the piston has performed a half oscillation. At that moment the valve Va1 is closed to hold the engine valve in the open position. Opening Va1 once more for a half oscillation period lets the piston swing back to its initial position. Of course, that is an idealised model. It neglects mechanical or hydraulic losses, hydraulic fluid compressibility in the cylinder chamber and in case of an engine outlet valve the considerable combustion gas pressure. Since fluid has to flow through the system's main valve Va1 that valve must be of sufficient nominal flow rate to create only negligible pressure losses and, furthermore, must be switching much faster than the intended switching time t_{sw} of the engine valve. Also measures must be taken to bring the system in its initial state and to compensate for losses which cannot be totally avoided. This is accomplished by the two valves Va1 and Va3.

In a simple mathematical model the idealised concept for the engine inlet valve VVT is composed of

1. The momentum equation for the motion $x(t)$ of the piston with the attached engine valve

$$m\ddot{x} = p_1 A_1 - p_2 A_2 \tag{3}$$

2. The compressibility relations which provide the relations for the two pressures (see, e.g. [26])

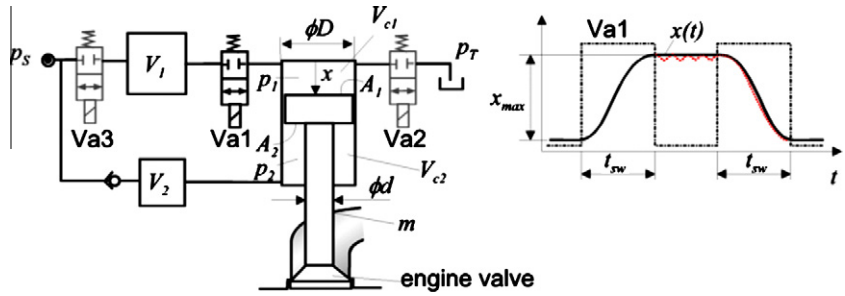

Fig. 3. Concept of an energy efficient hydraulic variable valve timing actuator and typical latching valve Va1 operation and engine valve motion $x(t)$: full line: motion of the concept model; dashed line: motion of the numerical model.

$$p_1 = p_S - E_{oil}\frac{xA_1}{V_1}, \quad p_2 = p_S + E_{oil}\frac{xA_2}{V_2} \tag{4}$$

p_1 and p_2 are the pressures in the two cylinder chambers and p_S is the system pressure (see Fig. 3). If Eq. (4) is inserted in Eq. (3) a mechanical oscillator equation results

$$m\frac{d^2x}{dt^2} + \left(\frac{E_{oil}A_1^2}{V_1} + \frac{E_{oil}A_2^2}{V_2}\right)x = p_S(A_1 - A_2) \tag{5}$$

From its solution which is a sinusoidal curve for $x(t)$ the two performance values stroke x_{max} and switching time t_{sw} can be derived easily

$$x_{max} = 2\frac{p_S}{E_{oil}}\frac{A_1 - A_2}{\frac{A_1^2}{V_1} + \frac{A_2^2}{V_2}} \tag{6}$$

$$t_{sw} = \pi\sqrt{\frac{m}{E_{oil}\left(\frac{A_1^2}{V_1} + \frac{A_2^2}{V_2}\right)}} \tag{7}$$

Eqs. (6) and (7) describe the DM of this simple concept model with its five DPs: p_S, A_1, A_2, V_1, V_2. Such compact analytical results can be interpreted directly without a graphical visualization. Even in this simple case a graphical representation of the DM would not be possible because of the dimensionality of the DM. From a design viewpoint the inverse of DM is needed, since the DP have to be found which fulfil the FRs.

The compression modulus E_{oil} of the hydraulic fluid is a material parameter that cannot be changed, hence is not considered a DP here. Also the mass m of the system is not a DP since the engine valve is a given part and the hydraulic piston which contributes to m is mainly determined by the stroke x_{max} and the two piston areas A_1 and A_2.

There are some technical constraints (BCs in the sense of Suh [12]) which limit the free choice of all five DPs.

BC_1: The hydraulic system pressure p_S is limited by available hydraulic components, like pumps and valves.
BC_2: The maximum value $p_{2,max}$ of the pressure p_2 should not exceed some limit values if usual hydraulic oil is used since compressibility decreases and viscosity increases significantly if pressures go beyond 700 bar.

These two constraints and the two FRs leave one degree of freedom for optimization, for instance, to minimize the maximum flow rate through Va1. This is motivated by the fact that development and realisation of fast switching valves with a high nominal flow rate are challenging tasks and larger valves have a tendency to require more actuation power and space. The maximum flow rate over Va1 is

$$Q_{max,Va1} = A_1\frac{\pi x_{max}}{2t_{sw}} \tag{8}$$

Thus, minimization of $Q_{max,Va1}$ requires minimization of piston area A_1 for which the following relation can be derived

$$A_1 = \frac{m\pi^2 x_{max}(p_S + p_{2,max})}{2p_S t_{sw}^2(p_{2,max} - p_{1,min})} \tag{9}$$

Eq. (9) states that $p_{2,max}$ should be maximized and $p_{1,min}$ minimized by going to the respective technical limits which have been discussed above for $p_{2,max}$. A lower limit for $p_{1,min}$ is avoidance of outgassing of air. With these relations explicit formulas for all DPs of the concept can be derived, shown in Eq. (10) for the remaining DPs.

$$A_2 = A_1\frac{p_S + p_{1,min}}{p_S + p_{2,max}}; \quad V_1 = A_1 x_{max}\frac{E_{oil}}{p_S - p_{1,min}};$$
$$V_2 = V_1\frac{p_S^2 - p_{1,min}^2}{p_{2,max}^2 - p_S^2} \tag{10}$$

6. Detail design model

The real performance is influenced by several effects that were neglected in the concept model and that depend on detail design features:

- pressure loss in the Va1; the associated parameter is the nominal flow rate $Q_{N,Va1}$,
- the finite switching time $t_{sw,Va1}$ of Va1 (the time needed to switch from off to fully on or vice versa) and $t_{on,Va1}$ (the time the controller commands Va1 to be switched on),
- friction and leakage between piston and cylinder; associated parameters are the clearance h_{gap} and length l_{gap} of the sealing gap between piston and cylinder and the oil viscosity ν_{oil},
- compressibility of the fluid in the cylinder; the associated parameters are the initial volume V_{c10}, when the engine valve is closed and the piston is in its initial position ($x = 0$), and the oil compression modulus E_{oil}.

Of course, the set of DPs in this model is much larger than of the concept model.

A model was set-up in Matlab/Simulink – shown by its schematic in Fig. 4 – which includes these additional effects and allows studying the role of the DP_{detail}. In the sense of the design attitude mentioned in Section 2 and the modelling relations of Section 3 the simulation study has to show if technically feasible DP_{detail} combinations of this extended model can be found which realize the $DM_{concept}$.

The detail mechanical design is shown in Fig. 5 by the assembly drawing and a photo of the test-rig. All components of this system according to the schematic of Fig. 3 are shown: the hydraulic actuation cylinder with its two chambers (having actual volumes V_{C1} and V_{C2}; V_{C10} is the initial value of V_{C1}), the two hydraulic spring

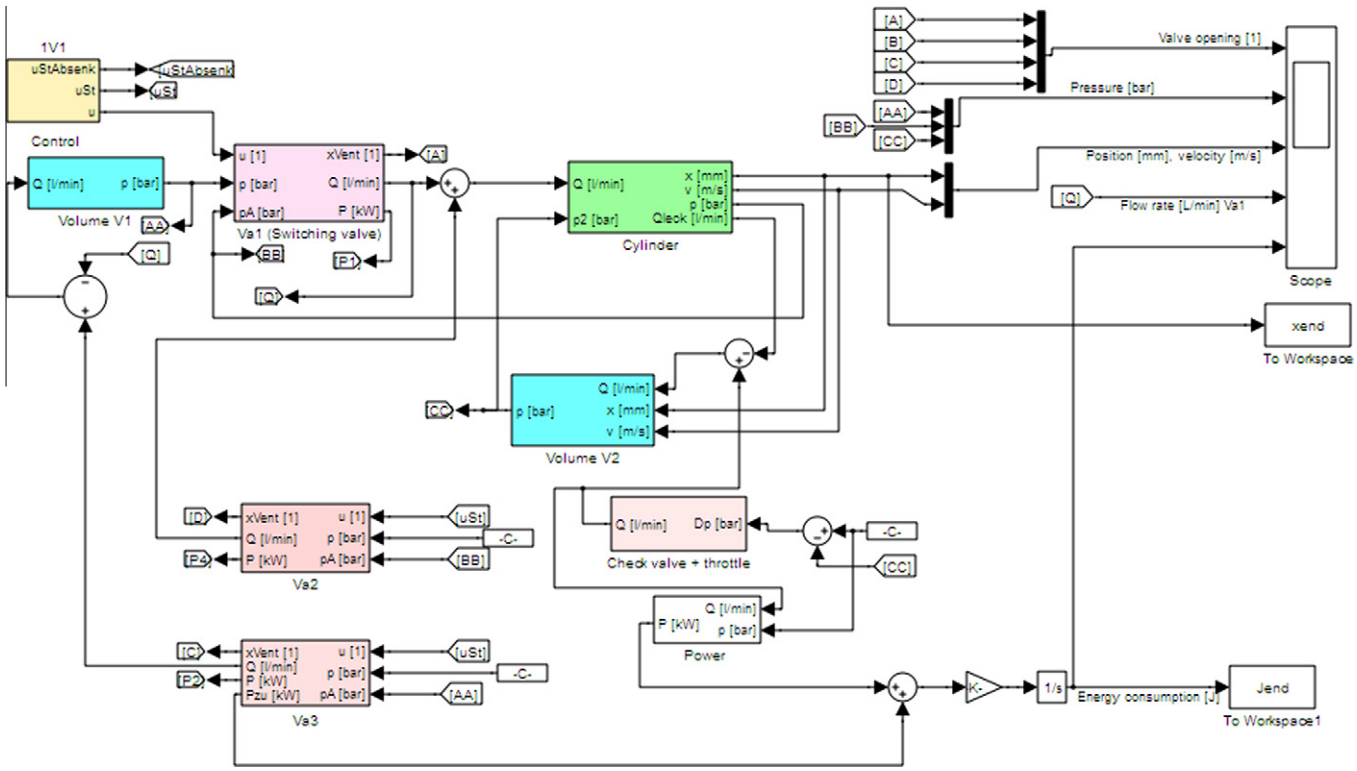

Fig. 4. Simulink model of a hydraulic variable valve train according to Fig. 3.

volumes V1 and V2, the mass m, and the three switching valves Va1, Va2, and Va3. The handling of the mapping Φ from DP_{detail} to $DP_{concept}$ is exemplified by the volume V_1 of the cavity V1. Fig. 5 shows that V1 consists mainly of three cylindrical volumes with their diameters $d_{V1,1}$, $d_{V1,2}$, $d_{V1,3}$, and lengths $l_{V1,1}$, $l_{V1,2}$, $l_{V1,3}$. The mapping Φ_{V1} from this subset of DP_{detail} to the element V_1 of $DP_{concept}$ reads

$$\Phi_{V1} := V_1 = \frac{\pi}{4}\sum_{i=1}^{3} d_{V1,i}^2 l_{V1,i} \tag{11}$$

The initial value V_{c10} of the cylinder chamber volume V_{c1} – the relation of both is given by Eq. (12) – is an important parameter of the detail model.

$$V_{c1} = V_{c10} + xA_1 \tag{12}$$

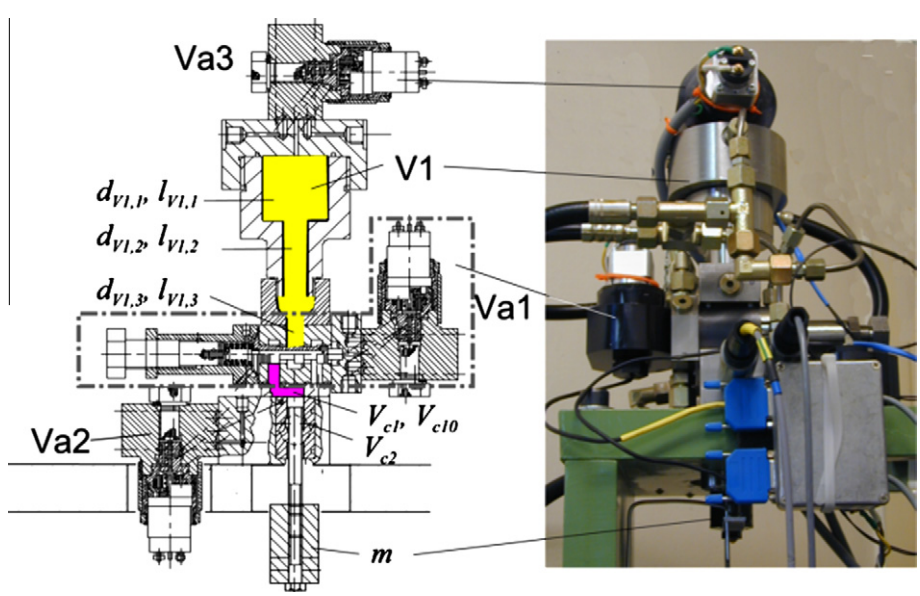

Fig. 5. Detail design drawing of a variable valve train actuator prototype employing a hydraulic concept according to Fig. 3. The volume V_1 of cavity V1 which is a simple parameter in the concept model is given by numerous DPs ($d_{V1,1}, d_{V1,2}, \ldots, l_{V1,3}$) of the detail model. Likewise the dead volume V_{c10} is determined by several geometric parameters of the detail design.

The compressibility related to V_{c1} causes losses and an oscillating motion of the piston when valve Va1 is closed after the opening motion (see dashed line of motion diagram in Fig. 3). Since these effects were ignored in the concept design model, V_{c10} plays only a trivial role in the mapping Φ. This can be expressed in the following mathematical form

$$\mathrm{DP}_{\mathrm{concept}} = \Phi(\mathrm{DP}_{\mathrm{detail}}) \equiv \tilde{\Phi}(\mathrm{DP}_{\mathrm{detail,reduced}});\quad V_{C1} \notin \mathrm{DP}_{\mathrm{detail,reduced}} \tag{13}$$

V_{c10} is not an explicit parameter of the final detail design but an intermediate modelling related parameter. This volume, shown as coloured area in Fig. 5, is determined by several dimensions of the mechanical design of the valve block of Va1 and of a connecting plate. Thus, even this refined Simulink model – like most models – uses a reduced parameter set that is linked to the detail design data by some mapping. Other examples of intermediate parameters are the switching time $t_{sw,Va1}$ and the nominal flow rate Q_{Va1} of the valve Va1. They depend on several mechanical and solenoid detail parameters of Va1. If such a valve or its main components are purchased from some vendor, the parameters $t_{sw,Va1}$ and Q_{Va1} would be specified requirements.

The whole mapping Φ reads

$$\begin{pmatrix} p_S \\ A_1 \\ A_2 \\ V_1 \\ V_2 \end{pmatrix} = \begin{pmatrix} p_S \\ D^2\pi/4 \\ (D^2-d^2)\pi/4 \\ \Phi_{V1}(d_{V1}, d_{V2}, d_{V3}, l_{V1}, l_{V2}, l_{V3}) \\ \Phi_{V2}(\ldots) \end{pmatrix} \tag{14}$$

Φ_{V1} is given in Eq. (11), Φ_{V2} is quite similar to Φ_{V1} and not explicitly stated here since not all relevant dimensions of the detail design can be seen in Fig. 5. The many parameters of the detailed model which have no effects in the concept model (like Q_{Va1}, t_{sw}, V_{C10}) are not explicitly shown in Eq. (14). They play the same role like y in the map $(x, y) \rightarrow f(x, y) = x^2$.

In the context of concept model evaluation this numerical model has to answer the question how much the additional effects of $\mathrm{DM}_{\mathrm{detail}}$ deteriorate $\mathrm{DM}_{\mathrm{concept}}$ (Eqs. (6) and (7)). A general graphical visualization according to Fig. 1 cannot be given due to the dimensionality of these maps. In Section 4.1 $\mathrm{DM}_{\mathrm{concept}}$ was augmented by BCs and an optimization criterion to derive an inverse DM from the two FRs to $\mathrm{DP}_{\mathrm{concept}}$. This approach can be exploited here to give a graphically visualized answer to the posted question. Fig. 6 shows in which way the A_1 coordinate of the inverse of $\mathrm{DM}_{\mathrm{concept}}$ – called ${\mathrm{DM}_{\mathrm{concept}}}^{(-1)}{}_{\mathrm{A1}}$ – is perturbed by the corresponding inverse $\mathrm{DM}_{\mathrm{detail}}$ – named ${\mathrm{DM}_{\mathrm{detail}}}^{(-1)}{}_{\mathrm{A1}}$ – if the three additional DPs: valve nominal flow rate Q_{Va1}, switching time $t_{sw,Va1}$, and dead volume V_{c10} are varied in the following intervals

$$\begin{aligned} &Q_{Va1} \in \left[\tfrac{1}{2}Q_{max,Va1} \cdots \tfrac{3}{2}Q_{max,Va1}\right] \\ &t_{sw,Va1} \in \left[\tfrac{1}{2} \cdots \tfrac{3}{2}\right] max\left(0.5\ \mathrm{ms}, \tfrac{Q_{Va1}}{50\ \mathrm{l/min}}\ \mathrm{ms}\right) \\ &V_{c10} \in [2 \cdots 5]0.0006\ (Q_{Va1}\ \mathrm{min/l})^{1.5} \end{aligned} \tag{15}$$

$Q_{max,Va1}$ is the maximum flow rate through Va1. The achievable switching time and the dead volume V_{C10} depend on the valve size. The corresponding rules of Eq. (15) have been found as an estimate for a piloted spool valve and how closely it can be connected to the hydraulic cylinder. Note, that the diagram in Fig. 6 does not show these parameters. The coordinate switching time t_{sw} is the achieved switching time of the engine valve which may significantly exceed the switching time $t_{on,Va1}$ commanded by the controller (block 'Control' in the Simulink model, see Fig. 4) if $t_{sw,Va1}$ is relatively large.

Fig. 6 shows ${\mathrm{DM}_{\mathrm{detail}}}^{(-1)}{}_{\mathrm{A1}}$ and ${\mathrm{DM}_{\mathrm{concept}}}^{(-1)}{}_{\mathrm{A1}}$. ${\mathrm{DM}_{\mathrm{detail}}}^{(-1)}{}_{\mathrm{A1}}$ – or correctly, its projection to ${\mathrm{DM}_{\mathrm{concept}}}^{(-1)}$ – is approximately represented by individual points (graphically visualized by small spheres in the figure) and the complex hull of these points. ${\mathrm{DM}_{\mathrm{concept}}}^{(-1)}{}_{\mathrm{A1}}$ is given by the curved meshed surface. ${\mathrm{DM}_{\mathrm{concept}}}^{(-1)}{}_{\mathrm{A1}}$ is actually covered by ${\mathrm{DM}_{\mathrm{detail}}}^{(-1)}{}_{\mathrm{A1}}$ in a wide range. This is the validity range of the concept model. There, detail parameter combinations can be found which realize the desired system performance in terms of the

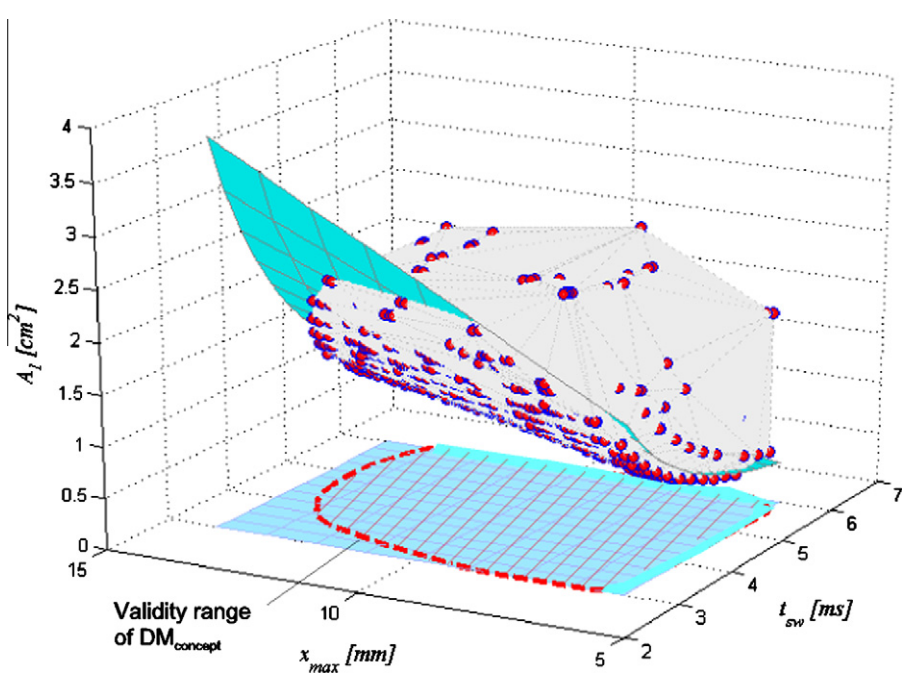

Fig. 6. Part of the inverse of the DMs of the concept model (curved surface: ${\mathrm{DM}_{\mathrm{concept}}}^{(-1)}{}_{\mathrm{A1}}$) and of the detail model (small spheres and triangular surfaces, respectively: ${\mathrm{DM}_{\mathrm{detail}}}^{(-1)}{}_{\mathrm{A1}}$); these DMs map from the space of the two FRs: $\mathrm{FR}_1 = t_{sw}$ and $\mathrm{FR}_2 = x_{max}$ to the DP space of the concept model; only the A_1 component (piston area) of this map is shown; rectangle and dashed line at base area show the projection of the ${\mathrm{DM}_{\mathrm{concept}}}^{(-1)}{}_{\mathrm{A1}}$ and ${\mathrm{DM}_{\mathrm{detail}}}^{(-1)}{}_{\mathrm{A1}}$, respectively. The dashed area constitutes the validity range of ${\mathrm{DM}_{\mathrm{concept}}}^{(-1)}{}_{\mathrm{A1}}$ projected to the FR space.

two FRs: t_{sw} and x_{max}, in other words, $DM_{concept}$ is robust there with respect to the detail design. The validity range ends where the convex hull intersects $DM_{concept}{}^{(-1)}{}_{A1}$. The projection of this validity range on the FR space is shown by the dashed area.

7. Summary and conclusion

Good conceptual design is a prerequisite for a successful product development. For that the sound understanding of the DM, i.e. the mapping from the space of the DPs to the space of FRs is essential. Good, i.e., simple but fairly accurate mathematical models of the DM are extremely helpful. Since product development typically envisages a wider range of final product realisations the knowledge of the validity range of these models is important for a successful systematic design.

In this paper a strong linkage of concept and concept models, i.e. models $DM_{concept}$ which map the $DM_{concept}$ of the concept into the space of FRs, is postulated. The comparison of refined models DM_{detail} used in detail design with concept models can be made by a mapping Φ from the space of DPs of the detailed model to the space of the DPs of the concept model and comparing the DM_{detail} of the detailed models with the $DM_{concept}$ of the concept model applied. That comparison can also be done by means of the inverses of these two DM. The implications and usage of this approach was exemplified by a variable valve train for engine valves.

The practical analysis of these model relations can only work if the DM or its inverse $DM^{(-1)}$ can be decomposed in a set of uncoupled maps with a small number of DPs each. This simplicity requirement corresponds to Suh's 1st design axiom. In view of his theory concept designers are always requested to evaluate the appropriateness of the FRs that are imposed on a certain design, since modifications of these FRs can have impact on the complexity of the DM. Suh's corollary #2 [12] – minimize the number of FRs – directly expresses this. Sometimes even small changes in the concrete definition of the FRs can make the DM simpler. In the example of the variable valve train in Section 4 this rule has been observed by posing only two FRs.

Developing powerful models for conceptual design is a field of high practical relevance. Currently model based design is a strong trend. The authors are convinced that the success of this trend relies on efficient concept models, much more than on the advancement of models for the detail design.

Acknowledgements

The authors appreciate the reviewers' comments and recommendations for improvement which made this paper much more understandable.

This work was sponsored by the Austrian Center of Competence in Mechatronics (ACCM) which is a COMET K2 center and is funded by the Austrian Federal Government, the Federal State Upper Austria, and its Scientific Partners.

References

[1] Bracewell RH, Chaplin RV, Bradley DA. Schemebuilder and layout: computer based tools to aid the design of mechatronic systems. In: Mechatronics – the integration of engineering design. The Institution of Mechanical Engineers; 1992. p. 1–6.
[2] Gawthrop PJ. Design of mechatronic systems using bond graphs. In: Mechatronics – the integration of engineering design. The Institution of mechanical Engineers; 1992. p. 15–21.
[3] Gawthrop PJ. Bond graphs: a representation of mechatronic systems. Mechatronics 1991;1:127–56.
[4] Ju MS, Hsu CJ. Automatic modeling of mechatronic systems via symbolic approach. Mechatronics 1991;1:157–74.
[5] Dargahia J, Sedaghatia R, Singha H, Najarianb S. Modeling and testing of an endoscopic piezoelectric-based tactile sensor. Mechatronics 2007;17: 462–7.
[6] Lia J, Sedaghatia R, Dargahia J, Waechter D. Design and development of a new piezoelectric linear inchworm actuator. Mechatronics 2005;15:651–81.
[7] Breeing A. Die Prinzipskizze als Ausgangsdokument der Konzeptphase. In: Proceedings of the international conference on engineering design (ICED'91), Zürich, Switzerland; 1991.
[8] Cross N. Engineering design methods. 2nd ed. Chichester: Wiley; 1989.
[9] Roozenburg NFM, Eekels J. Product design: fundamentals and methods. Chichester: Wiley; 1991.
[10] Thompson DE. Design analysis, mathematical modeling of nonlinear systems. Cambridge: Cambridge University Press; 1999.
[11] Buchheim G, Sonnemann R. Lebensbilder von Ingenieurwissenschaftlern. Basel: Birkhäuser; 1989.
[12] Suh NP. Principles of design. New York, Oxford: Oxford University Press; 1990.
[13] Suh NP. Axiomatic design, advances and applications. New York, Oxford: Oxford University Press; 2001.
[14] Steiner B, Scheidl R. Computer aided conceptual design, a concept study of fast hydraulic 2/2 way seat valves. In: Proceedings 4th FPNI-PhD symposium, Sarasota, Florida; 2006. p. 409–20.
[15] Friedmann JF. Constraint theory, multidimensional mathematical model management. IFRS international series on systems science and engineering, vol. 23. New York: Springer; 2005.
[16] Dierneder S, Scheidl R. Conceptual design, functional decomposition, mathematical modelling, and perturbation analysis. In: Pichler F, Moreno-Diaz R, Kopacek P, editors. Springer lecture notes in computer science 1798. Vienna: Springer; 1999.
[17] Nayfeh AH. Introduction to perturbation techniques. Hoboken (NJ): Wiley; 1993.
[18] Pahl G, Beitz W. Konstruktionslehre: Handbuch für Studium und Praxis. 2nd ed. Berlin: Springer; 1986.
[19] Scheidl R, Dierneder S, Mörwald K. Computer aided conceptual design by a functional decomposition method for process oriented heavy machinery and its relation to mechatronization. In: Bradshaw A, Counsell J, editors. Lancaster international workshop on engineering design – computer aided conceptual design. Lancaster: Lancaster University; 1998.
[20] Ziegler F. Mechanics of solids and fluids. New York – Vienna: Springer-Verlag; 1991.
[21] Young WC. Roark's formulas for stress and strain. 6th ed. New York: McGraw-Hill; 2002.
[22] Pischinger S, editor. Variable Ventilsteuerung. Essen: Expert-Verlag; 2002.
[23] Krimbacher N. Development, conceptual design and experimental verification of a novel switching type hydraulic actuator for energy saving fast positioning. PhD thesis, Johannes Kepler University Linz; November 2002.
[24] Plöckinger A, Krimbacher N, Scheidl R. A hydraulic energy efficient fast positioning actuator exploiting a hydraulic spring concept. In: Proc 8th Scandinavian int conf on fluid power, Tampere, Finland; 2003. p. 1187–201.
[25] Plöckinger A. Comparison of three different concepts for a variable valvetrain for huge combustion engines. In: Proc 3rd FPNI PhD symposium, Terassa, Spain; 2004. p. 453–62.
[26] Merrit H. Hydraulic control systems. New Jersey: Wiley; 1991.